Catalog Numbers, Features and Ratings

- 1 PHASE, 3 WIRE, 120/240V ~
- 100K AIC MAX. RATED (SEE WIRING DIAGRAM FOR DETAILS)
- CONVERTIBLE TO MAIN BREAKER
- INVERTIBLE
- TYPE N1 INDOOR ENCLOSURE
- ANSI 61 GRAY POWDER COATED ENCLOSURE (SEE CHART FOR TRIM/DOOR COLOR)
- DESIGNED FOR USE WITH PLUG-ON NEUTRAL BREAKERS

Catalog Number	ENCLOSURE DIMS (Inside) L	W	D	Amps Max	Number Spaces	Number Circuits	Bus Bar Material	Bus Bar Plating	Trim Color
PN1224L1125C	18.00	14.25	3.88	125	12	24	Copper	None	Gray
PN1224L1125CW	18.00	14.25	3.88	125	12	24	Copper	None	White

Trim/Door Detail

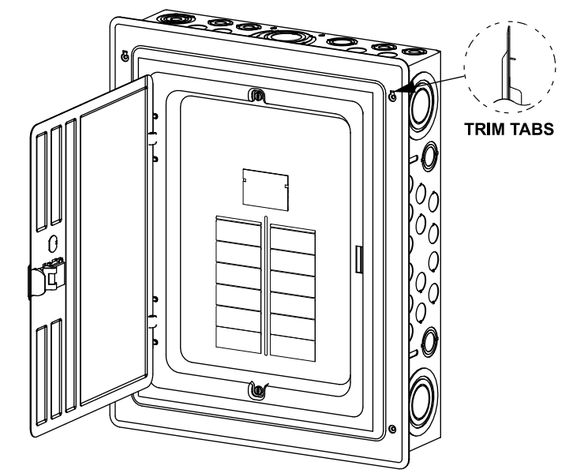

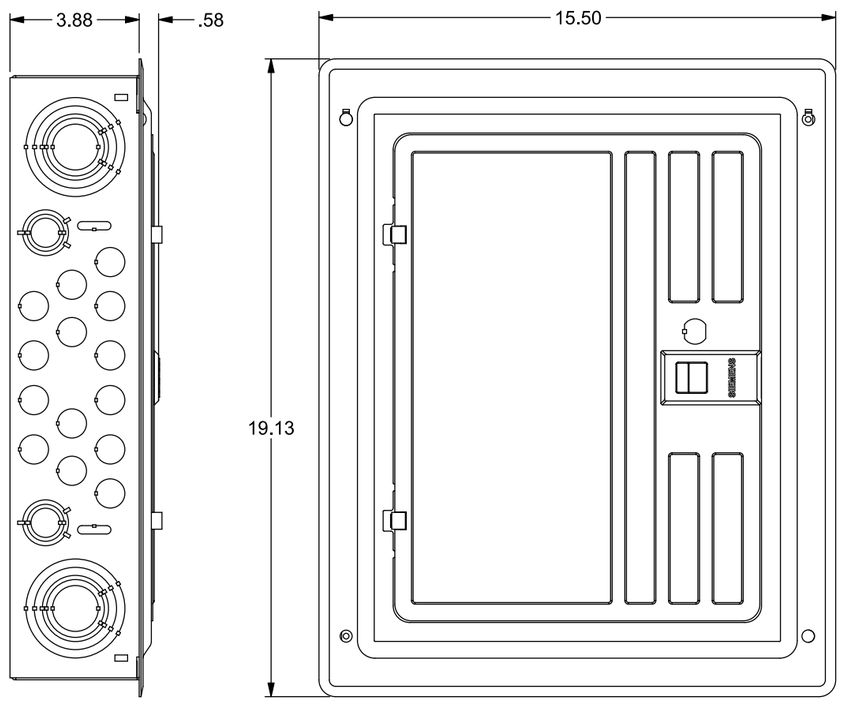

VIEW SHOWN WITH TRIM ASSEMBLY REMOVED

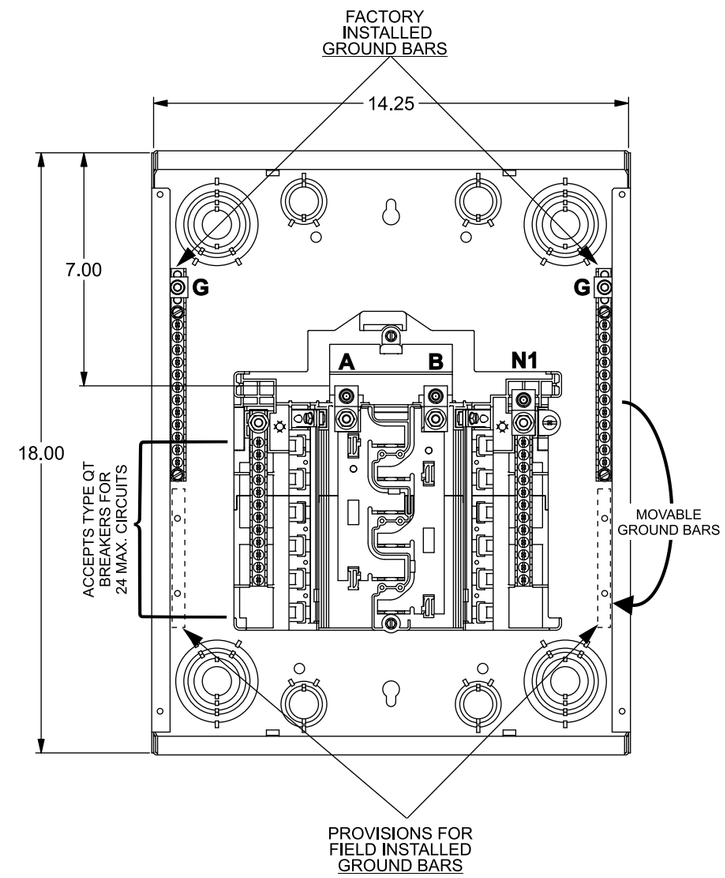

KO Diagram

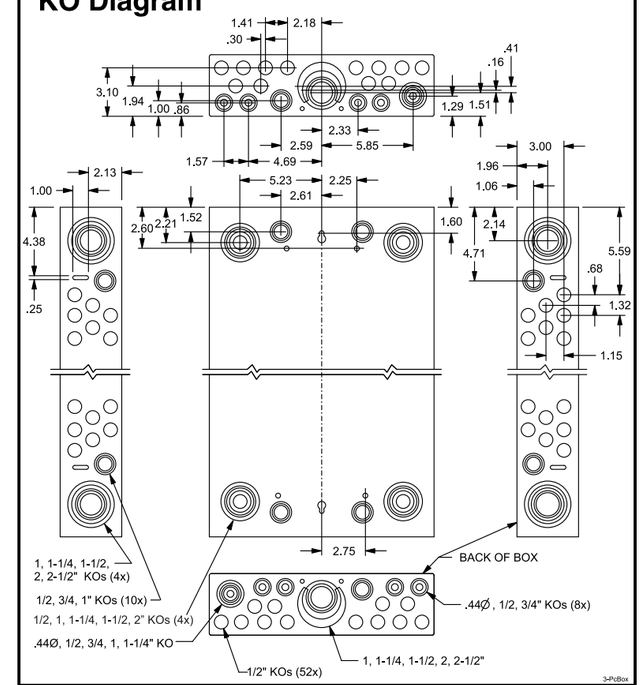

TERMINAL WIRE SIZES AND TORQUES

USE COPPER OR ALUMINUM 60°/75°C WIRE

SEE BREAKER MARKINGS FOR WIRE SIZE AND TORQUE REQUIREMENTS

TERMINALS	WIRE	TORQUE
A, B, G, N1	2/0 - 4 AWG	110 LB-INS
MAIN BREAKER - LINE	2/0 AWG CU; 3/0 AWG AL Max.	See Breaker
NEUTRAL/GROUND BARS (USE TYPE EC1GB or EC2GB GND BAR KIT ACCESSORY)	10-14 CU/10-12 AL 8 AWG 6-4 AWG	20 LB-INS 25 LB-INS 35 LB-INS
GROUND CONDUCTORS ONLY	(2)or(3) 14 AWG (2) 12-10 AWG	20 LB-INS 20 LB-INS
N2 ECLK2N NEUTRAL LUG	2/0 - 4 AWG	110 LB-INS
ECLK1-2 NEUTRAL LUG KIT	2/0 - 4 AWG	45 LB-INS
ECLK2 NEUTRAL LUG KIT	2/0 - 4 AWG	135 LB-INS
MAIN LUG/MAIN BRKR TO BUS CONNECTION (1/4-20 NUT)		45 LB-INS
BONDING SCREW		45 LB-INS

ACCESSORIES

REFER TO WIRING DIAGRAM FOR CORRECT ACCESSORY USAGE

MAIN LUG / MAIN BREAKER KITS	
USE APPROPRIATE KIT FROM CHART BELOW TO CONVERT PANEL	
DESCRIPTION	CAT. NO.
100 AMP MAIN BREAKER	MBK100A
125 AMP MAIN BREAKER	MBK125A
100-125 AMP MAIN LUG	ECMLK125

ACCESSORIES	
DESCRIPTION	CAT. NO.
DOOR LOCK	ECQFL2
FILLER PLATE, 1"	QF3
BREAKER HOLD-DOWN/BARRIER	ECMBR2
MAIN BREAKER FILLER PLATE	ECMBF125
SUBFEED LUG KIT	ECLK2125
STANDBY PWR INTERLOCK KITS: ECSBPK01, ECSBPK02, ECSBPK11	
SURF. MOUNT SPACER KIT	ECSMK1
ARC FLASH LABEL	ECAFL

GROUND BAR KITS	
DESCRIPTION	CAT. NO.
TYPE EC1GB KIT, 8 SCREWS	EC1GB8
TYPE EC1GB KIT, 8 SCREWS, 2/0 LUG	EC1GB82
TYPE EC2GB KIT, 12 SCREWS	EC2GB12
TYPE EC2GB KIT, 12 SCREWS, 2/0 LUG	EC2GB122
TYPE EC2GB KIT, 15 SCREWS	EC2GB15
TYPE EC2GB KIT, 15 SCREWS, 2/0 LUG	EC2GB152

© 2020 Copyright Siemens Industry, Inc.

SIEMENS
Siemens Industry, Inc.

Load Center

Description: **PN Series, 1 Phase, Indoor, 125A, 12 Pos, 24 Ckt, Main Lug**

KAM 3/31/20 | DO NOT SCALE DRAWING | Dwg No: **PN1224L1125C-W**